Smart Queue Management System (SQMS)

Abstract

In modern public and private service sectors such as banks, hospitals, educational institutions, and government offices, long waiting times are a common challenge due to inefficient queue management. Traditional manual queue systems often lead to overcrowding, mismanagement, and customer dissatisfaction. This project introduces a **Smart Queue Management System (SQMS)**, an embedded system-based solution designed to automate and streamline queue handling processes. The system generates digital tokens automatically, manages the order of service, and provides both **visual and audio notifications** to customers and service staff. By integrating microcontrollers, sensors, and actuators, this system ensures fairness, reduces waiting time, and improves overall service efficiency. The design is **cost-effective, user-friendly, and easily scalable**, making it suitable for real-life applications in a variety of service-oriented environments.

Project Overview

The **Smart Queue Management System** is a sophisticated embedded-system solution aimed at replacing conventional manual queue handling with an automated and organized process. It operates on a token-based system where users receive tokens digitally by interacting with the system through push buttons. Service counters then call tokens in sequential order, ensuring systematic service delivery. Key features include:

- **Priority service handling** for urgent cases
- **Automatic skipping of absent customers** to maintain smooth flow
- **Visual and audio alerts** for better customer awareness

By implementing this system, microcontrollers and electronic components demonstrate their practical application in solving real-world service management problems. The project provides an opportunity for students and developers to **gain hands-on experience with embedded system design, sensor integration, and actuator control** while addressing a significant everyday problem.

Introduction

Efficient queue management is a critical challenge in service-based environments. Customers often experience **long waiting times**, crowding, and frustration in banks, hospitals, ticket counters, and government offices. Traditional queues are manually managed, which leads to delays, inefficiency, and lack of monitoring.

Advancements in embedded systems and automation provide a pathway for designing **smart, automated solutions** that can organize queues effectively. The **Smart Queue Management System (SQMS)** is developed to:

- Automate queue handling
- Reduce crowding and waiting time
- Ensure fairness in service delivery
- Improve customer satisfaction

Beyond its practical utility, this project serves as an educational platform for students to **apply theoretical knowledge of microcontrollers, sensors, actuators, and programming** to a tangible problem. It bridges the gap between academic learning and real-world application, emphasizing the importance of technology in daily life.

Objectives of the Project

The main objectives of the Smart Queue Management System are:

- To **eliminate manual queue handling** and reduce human error
- To **minimize waiting time and prevent overcrowding** in service areas
- To **automatically generate and manage tokens** for systematic service
- To **ensure fair and transparent service order**
- To **provide audio and visual alerts** to enhance user awareness
- To **demonstrate practical applications of embedded systems** in solving real-world problems

Component List and Description

1. Arduino Nano

Overview:

Arduino Nano is a **compact, microcontroller-based development board** that acts as the **brain of the Smart Queue Management System**. It is responsible for executing all instructions, processing inputs from buttons and sensors, and controlling outputs such as displays, buzzers, LEDs, and motors.Its small size makes it ideal for embedded projects where space is limited.

Purpose in the System:

Token Generation: The Arduino Nano receives signals from the token button, generates a unique token number, and updates the display accordingly.

Display Updates: It sends information to the LCD to show the current token number, system status, and priority alerts.

Sensor Management: It reads input from IR sensors to detect whether a customer is present when their token is called.

Motor Control: The board controls servo motors and LED indicators to provide visual cues, ensuring smooth queue management.

Audio Alerts: It triggers the buzzer for audio notifications when a token is called.

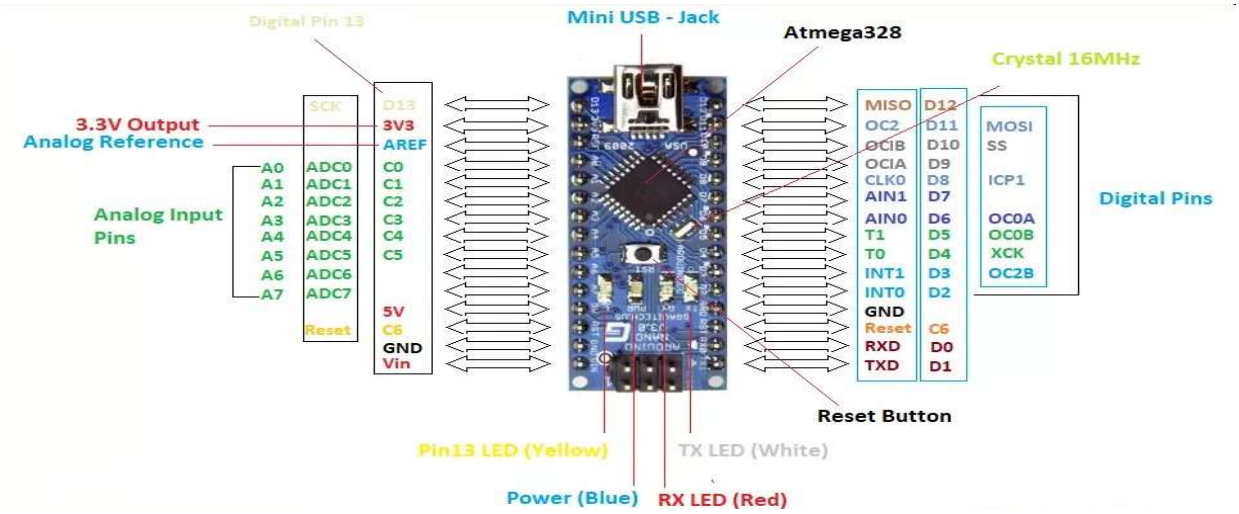

Figure 1: Arduino Nano

Features:

Programmable via Arduino IDE: Easy programming using simple C/C++ language.

Digital and Analog I/O: Can read sensors and control devices simultaneously.

Compatible with Various Modules: Supports LCDs, IR sensors, buttons, LEDs, buzzers, and servo motors.

Summary: Arduino Nano serves as the **central hub** that integrates all hardware components and ensures the Smart Queue Management System works efficiently, reliably, and automatically.

2. Push Buttons

Overview:
Push buttons are simple electronic devices that act as a **manual interface** between the user and the system. They are designed to detect a user's physical action, such as pressing or releasing, and convert it into an electrical signal that the microcontroller can read. In the Smart Queue Management System, push buttons allow customers and service staff to interact with the system **without the need for complex input devices** like keyboards or touchscreens.

Figure 2: Push Buttons

Purpose:

Token Generation: When a customer arrives, they press the token button to receive a unique token number, which the system generates automatically.

Calling the Next Token: Service staff press the "Next" button to call the following token in the queue, ensuring organized service.

Priority Service Request: Certain buttons are dedicated for urgent cases, allowing priority customers to skip the normal queue and receive faster service.

Features:

Simple Digital Input: Push buttons provide a straightforward HIGH/LOW digital signal to the microcontroller.

Quick Response: They respond instantly to user input, ensuring smooth operation of the token system.

Easy Integration: Push buttons can be easily connected to Arduino, NodeMCU, or other microcontrollers using basic wiring and coding.

Push buttons are **durable, low-cost, and reliable**, making them ideal for frequent use in public service environments. They also **reduce errors and simplify user interaction**, allowing even untrained users to operate the system efficiently.

3. Object Detection IR Sensor

Overview:
The IR (Infrared) sensor is an electronic device that detects the presence or movement of objects, specifically humans, without physical contact. It works by emitting infrared light and detecting its reflection from nearby objects. In the Smart Queue Management System, this sensor plays a crucial role in monitoring customer presence.

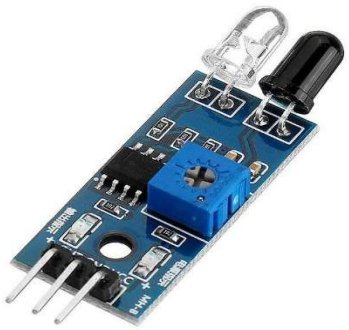

Figure 3: Object Detection IR Sensor

Purpose:

When a service counter calls a token, it is important to know whether the customer is actually present.

The IR sensor automatically **detects the presence or absence** of the person assigned to that token.

This helps the system **decide whether to wait or skip the token**, ensuring smooth and efficient queue management.

Working Principle:

- The sensor continuously emits infrared light.
- If a person is within its detection range, the light reflects back to the sensor.
- The sensor sends a signal to the microcontroller indicating that the customer is present.
- If no reflection is detected within a preset time, the system interprets it as the customer being absent and **moves to the next token automatically**.

Features and Advantages:

- **Non-contact detection:** Can sense humans without physical interaction, keeping the system hygienic and convenient.
- **Fast response time:** Quickly identifies presence, avoiding delays in token processing.
- **Low power consumption:** Operates efficiently without drawing excessive energy, making it suitable for continuous operation.

Significance:

- Ensures **fair and timely service**
- Reduces **waiting time caused by absent customers**
- Enhances the **overall efficiency and automation** of the queue management system

4. LCD Display

Overview:
The 16×2 LCD (Liquid Crystal Display) is an essential component in the Smart Queue Management System, providing **visual feedback** to users and service staff. The term "16×2" indicates that the display has **2 rows**, each capable of showing **16 characters**, allowing the system to present clear information in a readable format.

Purpose:
The main purpose of the LCD is to **display real-time information** such as the current token number, service counter status, and system notifications. This ensures that both the customer and the service staff can **easily monitor the progress** of the queue. By providing instant visual feedback, the LCD reduces confusion and improves efficiency.

Figure 4: LCD Display

Features and Explanation:

- **Clear real-time display:**
  The LCD updates the token number instantly whenever a new token is generated or called, ensuring users are **always aware of the current queue status**.
- **Low power usage:**
  LCDs consume very little power, making them **energy-efficient** and suitable for continuous operation in service environments without overloading the system.
- **Supports multiple updates per second:**
  The display can refresh rapidly, which allows the system to **show updated token numbers, skip absent tokens, or display priority notifications** in real-time.

Working in the Project:

- When a customer presses the token button, the LCD shows the **assigned token number**.

- As the service counter calls the next token, the LCD updates to display the **current token being served**.
- Any **priority or skipped token information** can also be displayed, keeping the service flow transparent and organized.

5. I2C Module

The **I2C (Inter-Integrated Circuit) module** is a communication interface used to connect multiple devices with just two wires: **SDA (data line)** and **SCL (clock line)**. It is widely used in embedded systems for connecting sensors, displays, and other peripherals with a microcontroller.

Purpose:

In the Smart Queue Management System, the I2C module is primarily used to connect the **LCD display** (or other I2C-compatible devices) to the microcontroller. It simplifies wiring and allows multiple devices to share the same communication lines.

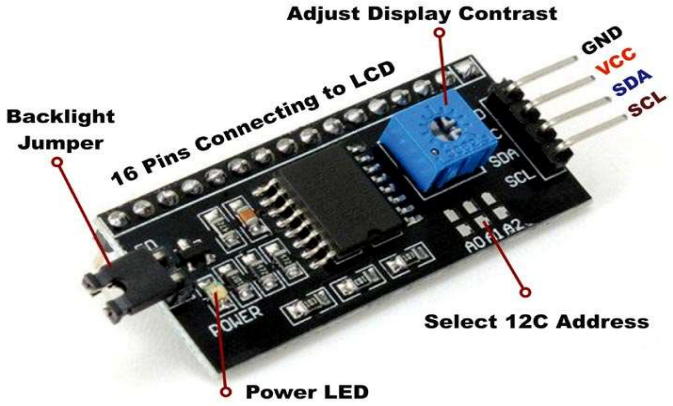

Figure 5: I2C Module

Wiring and Connection:

Connect the **SDA pin** of the I2C module to the microcontroller's SDA pin. Connect the **SCL pin** to the microcontroller's SCL pin. Power the module using **VCC and GND pins**.

Operation:

The microcontroller acts as a **master**, and the connected devices (e.g., LCD) act as **slaves**. Data is transmitted sequentially in bytes, synchronized with the clock (SCL). Each device has a unique **address**, allowing multiple devices to operate on the same bus without conflict.

Advantages in the Project:

Reduces the number of wires compared to traditional parallel LCD connections. Allows easy expansion by connecting more devices like sensors or additional displays. Ensures fast and reliable communication between the microcontroller and peripherals.

6. Buzzer

Overview:

- The buzzer is an **audio output device** used in electronic systems to provide sound notifications.
- It is a simple and effective way to **alert users** without requiring them to constantly watch a display.
- In the Smart Queue Management System, the buzzer acts as an **audible signal** whenever a customer's token is called.

Purpose:

- **Notify customers**: When the next token is called, the buzzer sounds to grab the attention of the waiting customer.
- **Enhance system efficiency**: Customers don't have to rely only on visual indicators like LCD displays; they can respond immediately when they hear the alert.
- **Complement visual alerts**: Together with the LCD and LED indicators, the buzzer ensures that all customers are informed effectively.

Figure 6: Buzzer

Features and Advantages:

- **Audible indication**: Produces clear sound, ensuring that the notification is noticeable even in noisy environments.
- **Easy interfacing**: Can be easily connected to microcontrollers like Arduino or NodeMCU, using simple digital output pins.
- **Low-cost**: Buzzers are inexpensive components, making the system budget-friendly.
- **Reliable operation**: They provide consistent alerts over long periods without requiring complex maintenance.
- **Energy-efficient**: Consumes minimal power, making it suitable for continuous operation in service environments.

Step-by-step working in SQMS:

1. The service counter presses the **Next Button**.
2. The microcontroller **sends a signal** to the buzzer.
3. The buzzer **emits a sound** alerting the customer.
4. The customer identifies their token number from the LCD and approaches the counter.

7. Servo Motor

Overview:
A servo motor is a type of motor that can rotate to a **specific angle** rather than continuously spinning like a regular motor. In this project, a **180-degree servo motor** is used, which means it can rotate from 0° to 180° precisely, allowing controlled movement in half a circle. This makes it ideal for tasks that require accurate positioning.

Purpose in the System:

Acts as a **visual indicator** to show that a token is being called. For example, it can point to a number or move a small indicator on a display panel. Can be used for **mechanical operations** such as opening or closing a small gate, flap, or barrier when a token is called or skipped. Ensures **interaction between digital signals and mechanical movement**, demonstrating practical embedded system applications.

Figure 5: I2C Module

Features and Advantages:

Accurate angle control: Can move precisely to any angle between 0° and 180°, allowing reliable positioning.

Compact and energy-efficient: Small in size and consumes very little power, suitable for embedded systems.

Reliable performance: Provides consistent movement over repeated cycles, ensuring system accuracy and durability.

Easy to interface with microcontrollers: Can be controlled using simple PWM (Pulse Width Modulation) signals from Arduino or NodeMCU.

Role in the Smart Queue System:

- Provides **real-time feedback** to users.
- Enhances **visual clarity** along with LCD and buzzer alerts.
- Makes the system **interactive and user-friendly**, improving the overall experience.

8. LED Indicators

Overview:

LEDs (Light Emitting Diodes) are **small electronic components** that emit light when current passes through them. In the Smart Queue Management System, they serve as **visual indicators** to provide clear, immediate information about the system's status.

Purpose:

LED indicators **communicate the current state of the system** to both customers and staff. These visual cues **reduce confusion** and improve the overall efficiency of queue management.

Features:

LEDs are **bright and highly visible**, ensuring information is easily noticeable from a distance. They have a **long lifespan**, making them reliable for continuous use. LEDs **consume very low power**, which helps maintain energy efficiency and reduces operational cost.

LED indicators are **simple yet essential components** that enhance user awareness and make the system more intuitive and organized.

9. SMPS Module

Definition of SMPS:

SMPS stands for **Switched-Mode Power Supply**. It is an electronic power supply that efficiently converts electrical voltage from one level to another using switching regulators instead of linear regulators.

Purpose in this Project:

Most embedded systems, including Arduino, NodeMCU, sensors, and other components, **require a stable 5V DC supply**. The SMPS module converts higher input voltage (like 12V or AC mains) into a **regulated 5V output** suitable for microcontrollers and peripherals.

Working Principle:

Step 1: The input voltage is first rectified and filtered (if AC input) to produce a DC voltage.

Step 2: This DC voltage is then chopped rapidly using a **high-frequency switch.**

Step 3: The chopped voltage passes through an **inductor and capacitor filter**, smoothing it into a stable 5V DC output.

Step 4: A **feedback control mechanism** monitors the output voltage and adjusts switching duty cycle to maintain a constant 5V output even with varying load or input.

Advantages of Using SMPS for 5V Conversion:

- High **efficiency** (~85–95%) compared to linear regulators
- **Compact size** and lightweight
- Provides **stable and regulated voltage** for sensitive electronics
- Reduces **heat generation**

Figure 5: SMPS Module

Application in Smart Queue System:

Powers **Arduino Nano, LCD, IR sensors, LEDs, buzzer, and servo motors** safely and reliably.

Key Features of the Project:

Automatic Token Generation for Customers:

When a customer presses the token button, the system automatically generates a unique token number. This eliminates the need for manual record-keeping and reduces human errors. It ensures that every customer receives a token in the order of arrival, creating a systematic queue.

Sequential Token Calling to Maintain Order:

The system calls tokens one by one in sequence using the next button at the service counter. This feature ensures that all customers are served in a fair and organized manner without skipping anyone unintentionally.

Audio Alerts Using Buzzer:

Every time a token is called, the buzzer sounds to alert the customer. This helps customers who may not be looking at the display to be aware that their turn has arrived.

Visual Alerts Using LCD and Servo Motor:

The current token number is displayed clearly on the LCD screen. The servo motor can act as an additional visual indicator, such as pointing to a specific counter. These visual alerts assist hearing-impaired users or crowded environments.

No-Show Skipping Mechanism:

If a customer does not respond within a fixed time, the system automatically skips the token. This prevents delays and ensures smooth flow of service.

Priority Service Handling:

Urgent cases or priority customers can press the priority button to be served first. This ensures that critical services are delivered quickly without disturbing the overall order.

Fair and Organized Service Flow:

Combining all these features guarantees a transparent, systematic, and fair service process. It reduces confusion, waiting time, and improves overall efficiency for both staff and customers.

Working Principle of the System

The **Smart Queue Management System** operates in a structured and automated manner to manage customer queues efficiently. Initially, when a customer arrives, they **press the Token Button** to request a service. This action signals the microcontroller to **generate a unique token number**, which is then displayed clearly on the **LCD screen**. This allows the customer to know their position in the queue immediately.

When a service counter is ready to serve the next customer, the staff **presses the Next Button**, prompting the system to call the next token in sequence. To alert the customer, the system activates an **audio signal via a buzzer** and a **visual signal using a servo motor**, ensuring that the customer can notice the call even in a crowded environment.

An **IR sensor** monitors the presence of the customer at the counter. If the sensor does not detect the customer within a predetermined response time, the system **automatically skips that token** and moves to the next one, preventing delays and maintaining an organized flow.

Additionally, the **Emergency Button** can be used for urgent or special cases, allowing those customers to bypass the normal queue without affecting the overall order. This cycle continues automatically, **ensuring fair, efficient, and smooth service flow** for all customers, while minimizing waiting time and crowding in the service area.

Application Areas

The **Smart Queue Management System (SQMS)** is a versatile solution that can be implemented in a wide range of service-oriented environments where long waiting times and crowd management are common challenges. One of the primary areas of application is **banks and financial institutions**, where customers often face long queues for services like deposits, withdrawals, or account inquiries. By implementing SQMS, banks can ensure systematic service, reduce waiting times, and improve customer satisfaction.

In **hospitals, clinics, and diagnostic centers**, timely service is crucial, especially for patients requiring urgent attention. The system can efficiently manage patient flow, prioritize emergency cases, and minimize overcrowding in waiting areas, thereby enhancing operational efficiency and patient experience.

University and college administrative offices are another significant application area. Students frequently visit these offices for fee payments, document verification, or registration processes. Using SQMS, institutions can automate token generation and provide clear visual and audio notifications, making administrative procedures more organized and less stressful for both students and staff.

Ticketing counters for transport and events, such as bus terminals, railway stations, and cinema halls, can also benefit from this system. SQMS ensures orderly service, reduces confusion during peak hours, and allows priority handling for urgent or special cases.

Additionally, **government service centers**, such as passport offices, municipal offices, and social service departments, often experience heavy foot traffic. The system helps maintain fair service order and prevents overcrowding. Similarly, **customer service and support centers** in retail or telecom sectors can use SQMS to manage walk-in clients efficiently, improving service quality and customer satisfaction.

Overall, the Smart Queue Management System is a **flexible and scalable solution** that enhances efficiency, fairness, and organization across multiple sectors, making it highly relevant in modern service-oriented environments.

Advantages of the System

The **Smart Queue Management System** offers several significant advantages that make it an effective solution for service-oriented environments. First, it **reduces crowding, confusion, corruption and chaos** by organizing the flow of customers in a systematic manner, ensuring that each person is served in turn without unnecessary disorder. This structured approach also **saves time for both customers and service providers**, as waiting periods are minimized and service counters operate more efficiently. The system **ensures fairness and transparency**, since every token is issued and called in sequence, preventing favoritism or disputes. Additionally, it is **user-friendly, easy to install, and simple to maintain**, allowing organizations to implement it without extensive technical knowledge. With **minimal hardware requirements**, it remains a **cost-effective solution** suitable for small to large setups. Finally, the system provides **reliable and consistent performance**, maintaining smooth operation even during peak hours, which enhances customer satisfaction and service quality.

Conclusion

The **Smart Queue Management System** offers a practical and efficient solution for managing queues in service-oriented environments. By leveraging embedded system technology, it **automates token management, improves service efficiency, and reduces waiting time**. This project fulfills academic requirements, while also providing **hands-on experience in microcontroller programming, sensor integration, and system design**. It highlights how simple electronic components, when intelligently combined, can solve real-world problems effectively and economically. The system is **scalable, adaptable, and applicable** to a wide range of service sectors, making it a valuable addition to modern automation solutions.